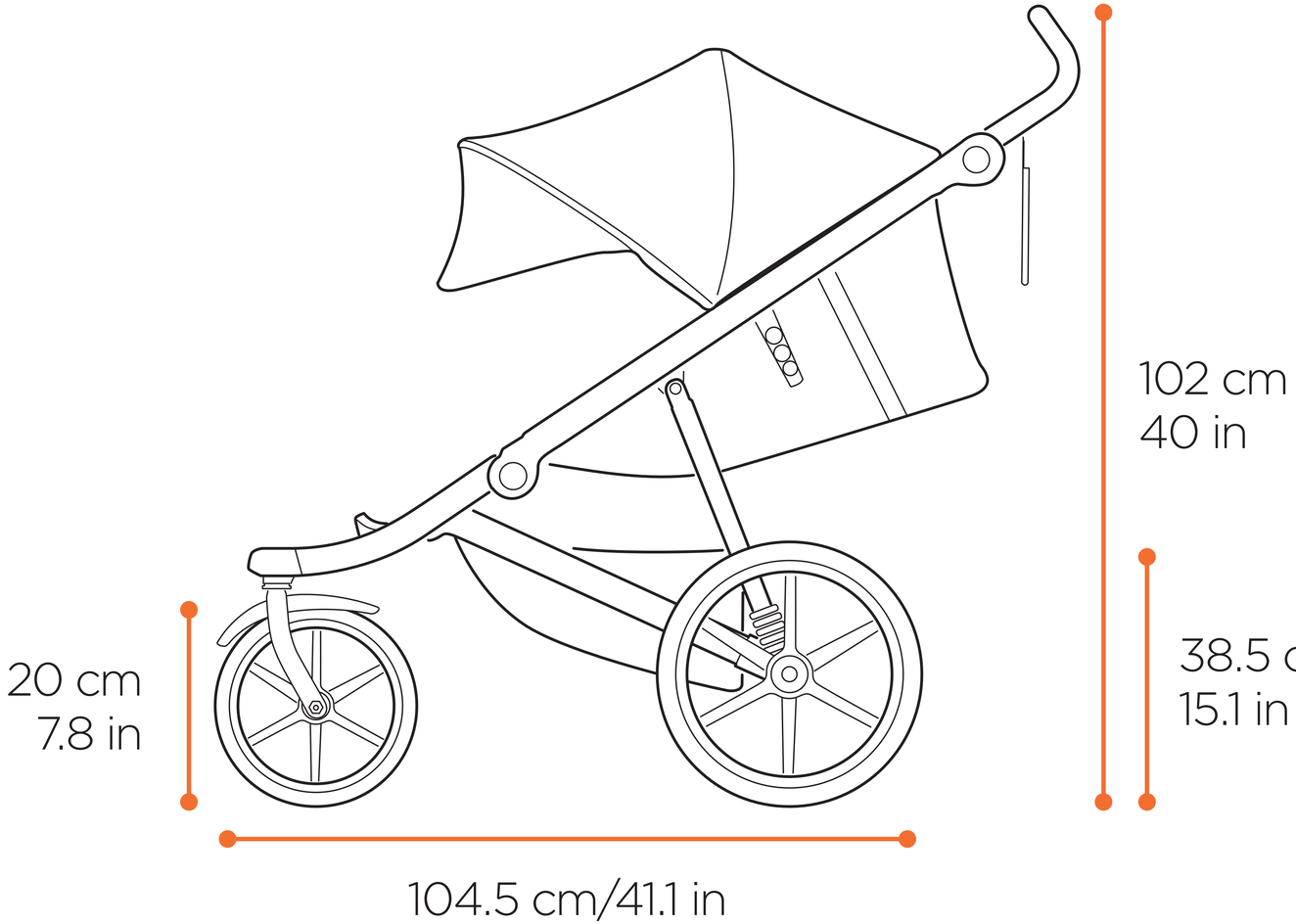
102 cm
40 in
38.5 cm
15.1 in
20 cm
7.8 in
104.5 cm/41.1 in

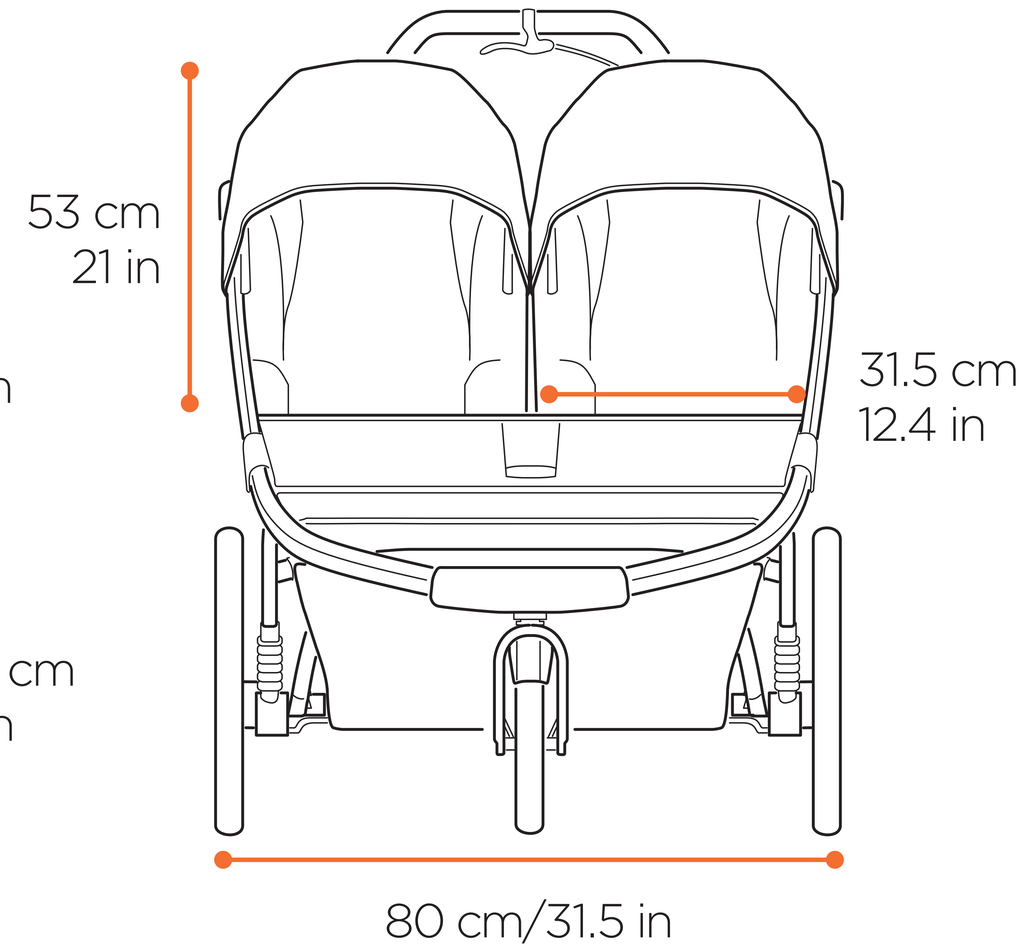
53 cm
21 in
31.5 cm
12.4 in
80 cm/31.5 in

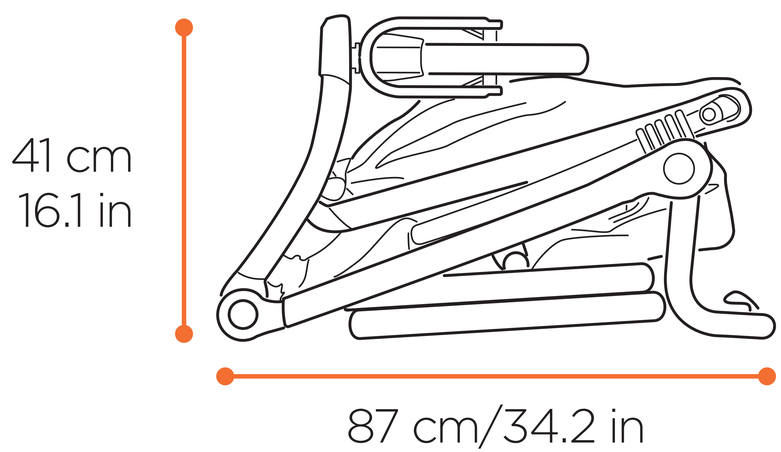
41 cm
16.1 in
87 cm/34.2 in